JABATAN KEJURUTERAAN ELEKTRIK

COURSE CODE	EC302	**COURSE NAME**	ELECTRONIC COMPUTER AIDED DESIGN
COURSE WORK	LAB WORK 4	**TOPIC**	TRANSIENT ANALYSIS
DATE			

Learning Outcomes:

1. Apply various types of analyses and tools provided in the simulation package and analyze the simulation results to ascertain its compliance to the electronic circuit theory.
2. Draw the various analogue, digital and mixed-signal circuit schematics and simulate the circuits using a particular simulation package.

Laboratory Equipment:

Computer / MicroSim Eval 8

Theory:

What is AC Analysis

AC analysis is a type of analysis which involves the use of ac source. The ac source can be set to a single frequency or multiple frequencies. For multiple frequencies, the magnitude of the source is set the same.
AC Sweep and Noise are types of AC analysis that evaluate circuit performance in response to a small-signal ac source. AC Sweep outputs include voltages and currents with magnitude and phase. Bode plot is another AC sweep output where the response of a circuit towards change in the frequency of ac input source (Frequency Response Curve) together with gain in decibel unit can be obtained and plotted.

Setting up AC Sweep
To set up an AC Sweep, values for certain attributes have to be set before the ac analysis could run or executed. The attributes are:
a) AC Sweep type : type of sweep to be used (linear, octave, decade)
b) Sweep parameter.
   i. Points per decade : number of point to be plotted for every frequency decade.
   ii. Start frequency : the frequency at which Pspice starts simulation.
   iii. End frequency : the final frequency at which Pspice stops simulation.

Filter
A filter is a device in which the gain is designed to be a special function of the frequency. The major classifications of filters are:
1. Low-pass – passes low frequencies.

2. High-pass – passes high frequencies.
3. Bandpass – passes frequencies within a band
4. Band-stop(notch) – block frequencies within a band

Any of these filter can be either passive or active. A passive filter uses only resistors, capacitors, and inductors. An active filter usually is implemented with an op amp that employs both positive and negative feedback.

Amplifier

An **amplifier** is an electronic device that increases the voltage, current, or power of a signal. Gain and bandwidth are important in the amplifier. The gain of an amplifier is the ratio of output to input power or amplitude, and is usually measured in decibels. The bandwidth of an amplifier is the range of frequencies for which the amplifier gives "satisfactory performance". The definition of "satisfactory performance" may be different for different applications.

$$BW = fc2 - fc1$$

Procedure for exercise activities:

1. To do an AC analysis setup. Click on ***analysis setup*** icon. Check the ***Enable*** box on left of AC Sweep box.
2. Click on the ***AC Sweep*** box and key in the attributes for the ac analysis as in the figure 4.1.

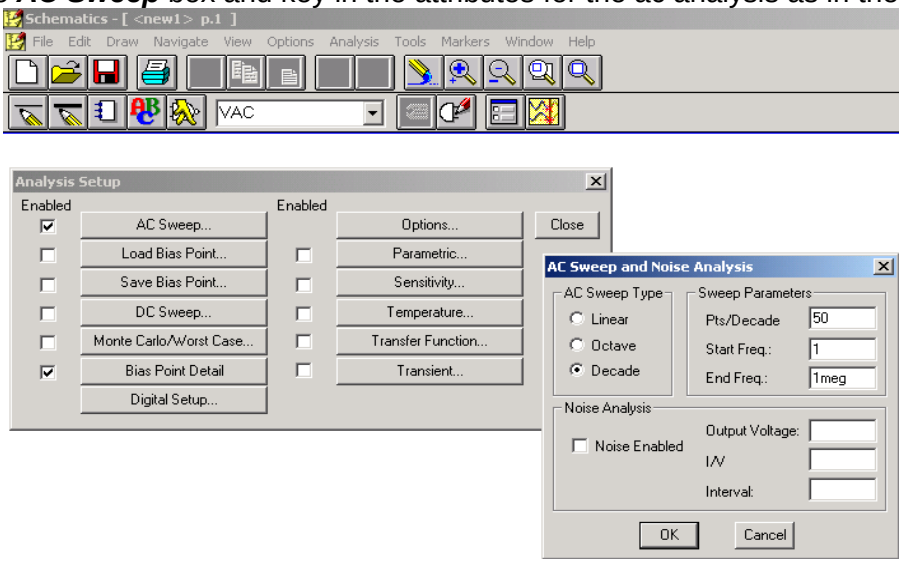

Figure 4.1: AC Analysis Setup

3. Refer to an amplifier circuit in Figure 4.2 as a sample circuit.
4. Place a bubble at the output of the circuit. Label the bubble as vout.

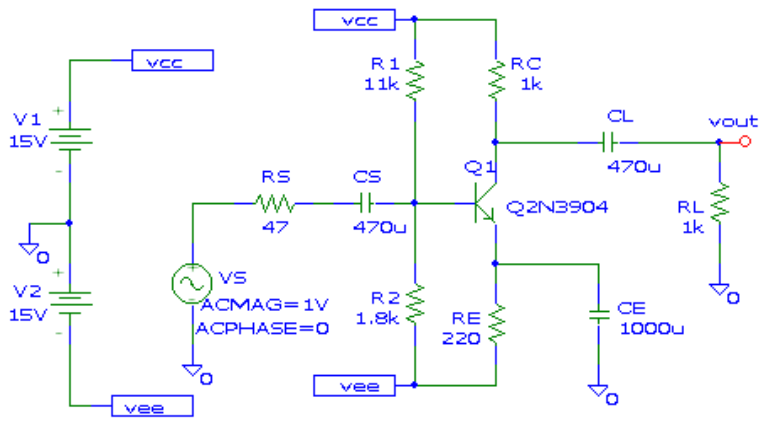

Figure 4.2: Amplifier Circuit

5. Set run probe automatically after simulation in the probe setup.
6. Click ***Analysis*** and then ***Probe Setup***.

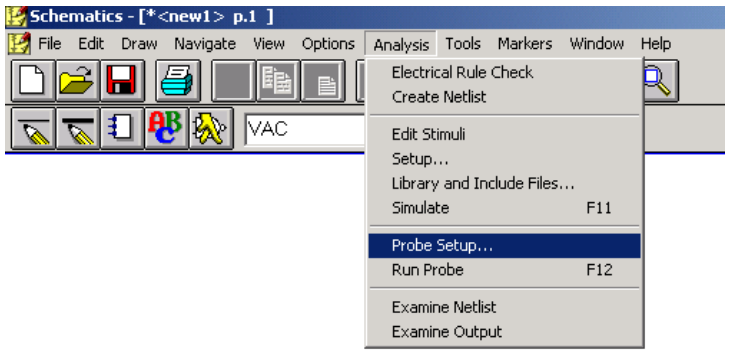

Figure 4.3(a): Probe Setup

7. Select **Automatically Run Probe After Simulation.**

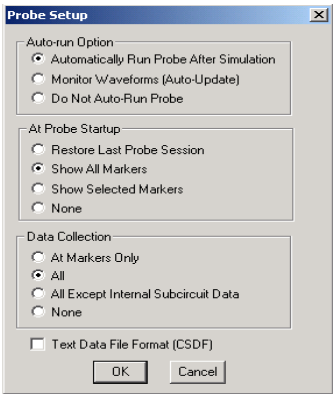

Figure 4.3(b): Probe Setup

8. Run simulation.
9. Click ***Analysis*** and then ***Simulate*** or click the simulation icon directly.
10. Probe will generate a blank plot for the user.

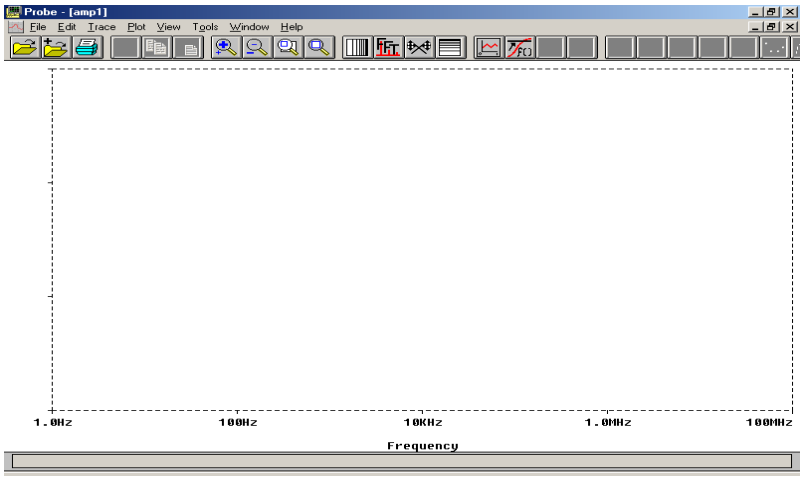

Figure 4.4 (a): Blank Probe

11. To plot a frequency response curve.
12. Click Trace and then click Add.

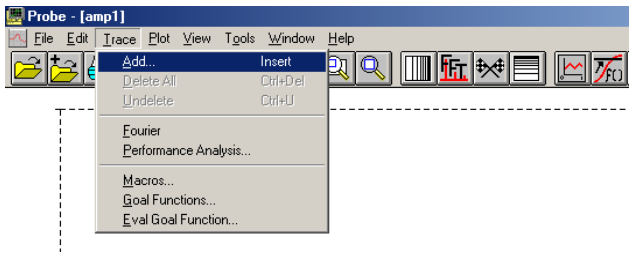

Figure 4.4 (b): Add Trace

13. A trace list will be displayed for the user to select.
14. Highlight DB( ) in the Function of macros section and highlight V(vout) in the node names
15. Refer to figure 4.4(c), user could also key-in the text VdB(vout) in the trace box instead.

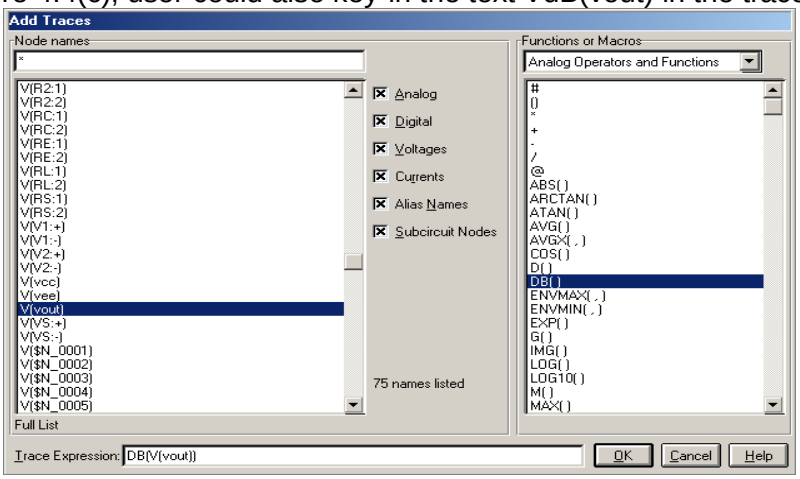

Figure 4.4 (c): Trace Expression

16. Probe will display the Bode plot for the circuit output.

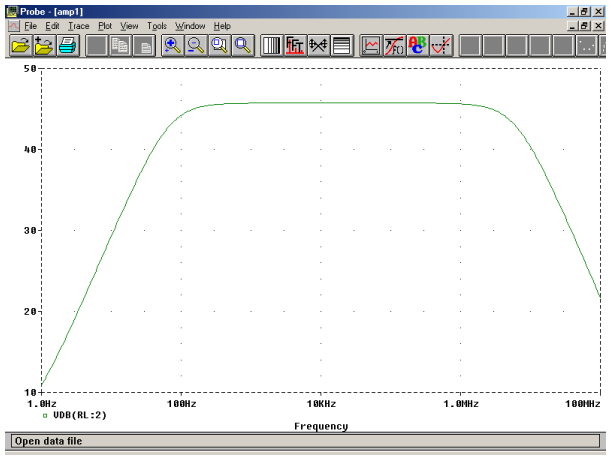

Figure 4.4 (d): Waveform

17. For Probe to generate a frequency response curve automatically, use “Mark Advanced” on the schematic. Markers are used to indicate circuit points to be monitored and probe will automatically draw the frequency response curve for those nodes after simulation. Refer figure 4.5 (a) and 4.5 (b).

18. Place a dB marker at any node in the circuit.

- Click ***Markers*** menu and choose ***Mark Advanced***.

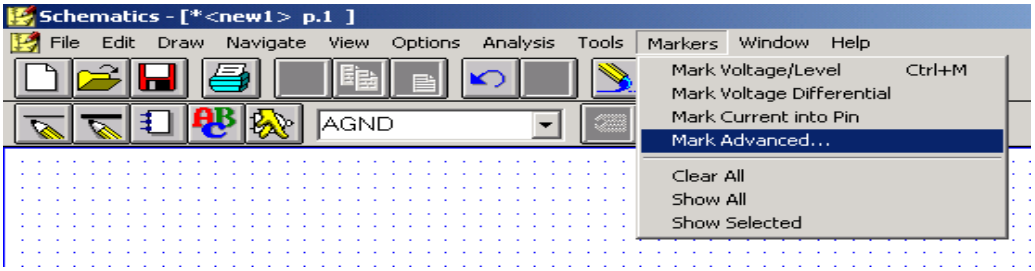

Figure 4.5 (a) : Markers

- Select ***vdb***.

19. Selecting vdb will instruct probe to draw frequency response curve using decibel unit for the y-axis of the plot.

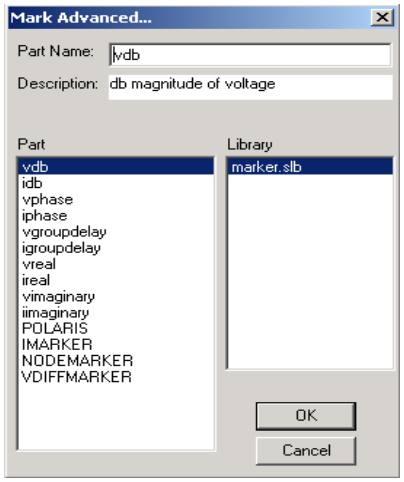

Figure 4.5 (b) : Mark Advanced

20. Place the vdb marker at the output of the sample circuit (across RL).
21. Simulate the circuit.
22. Probe will generate a Bode plot right after simulation such as figure 3.6

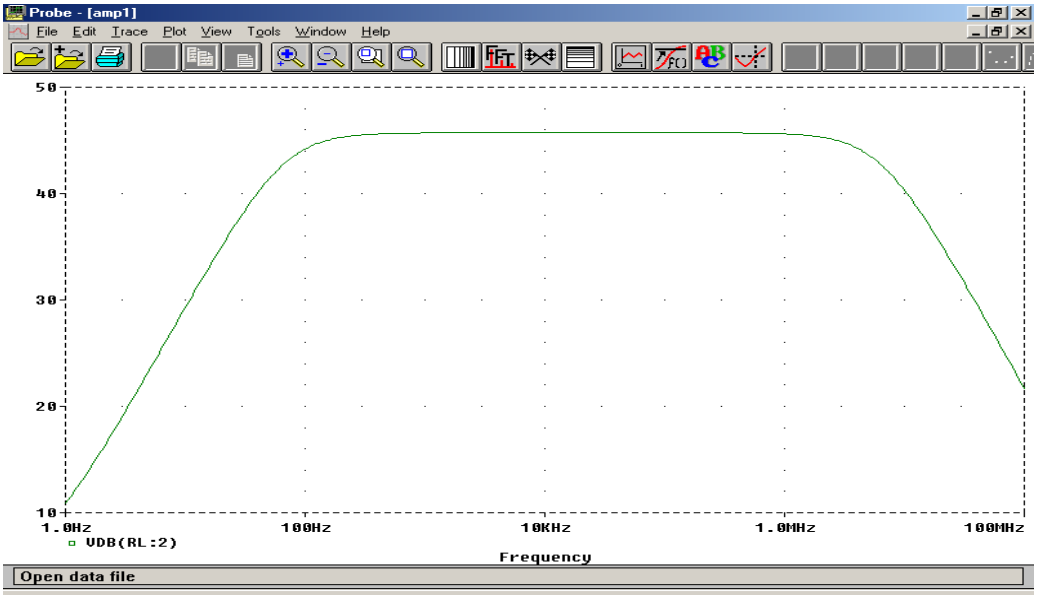

Figure 4.6 : Output waveform in dB

23. Click and drag the cursor using left mouse button until the maximum gain is reduced 3dB from the maximum gain. The frequency where the gain drops 3dB from the maximum gain is called the cut-off frequency.
24. To determine fc1, use probe cursor. Click ***Tools, Cursor*** and ***Display***. Probe Cursor Window will be displayed.

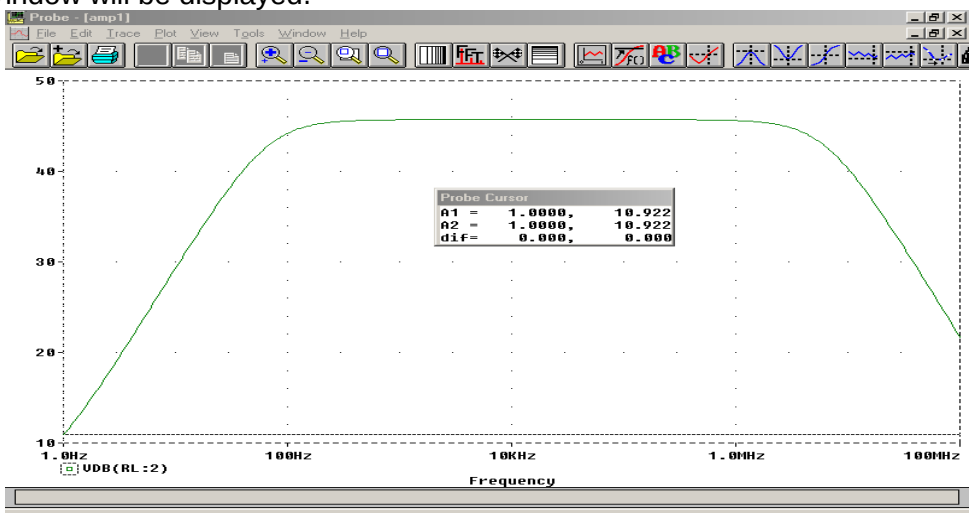

Figure 4.7 : Probe cursor

25. Observe the values displayed in the Probe Cursor Window. The x-axis value is the frequency and the y-axis value is the gain (dB).
26. Find maximum gain of the Bode plot. Click ***Tools, Cursor*** and then ***Max***.
27. The cursor now will be placed at the maximum gain. The maximum gain can be obtained from ***Probe Cursor Window***. The value **48.731** as you can see in the window is the maximum gain.

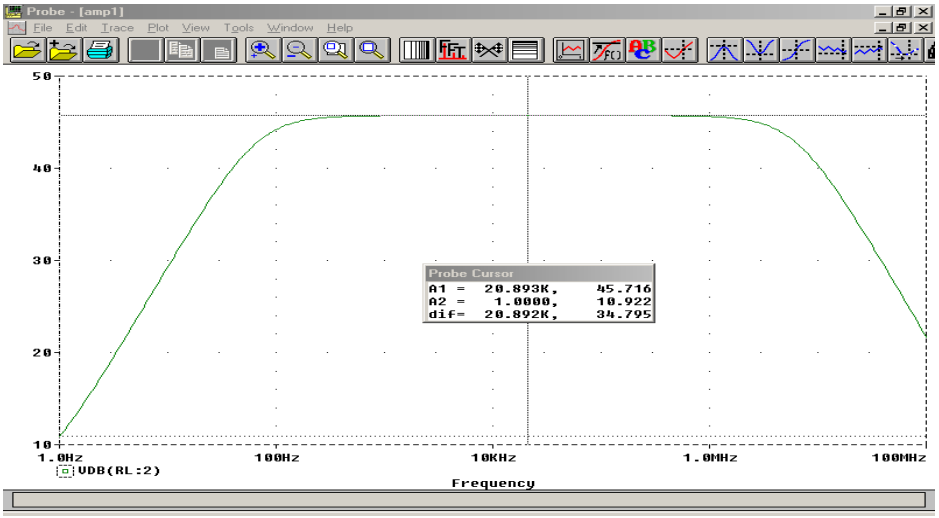

Figure 4.8: Maximum gain

28. Point and click the mouse left button on the cursor and drag the cursor down the plot. Observe the values for A1and A2 in the Probe Cursor Window also change.
29. Drag the cursor down until the gain drops 3dB from the maximum gain. (left bodeplot– fc1)
30. Mark the frequency and gain values on the plot.
31. Click ***Tools***, ***Label*** and then ***Mark***.

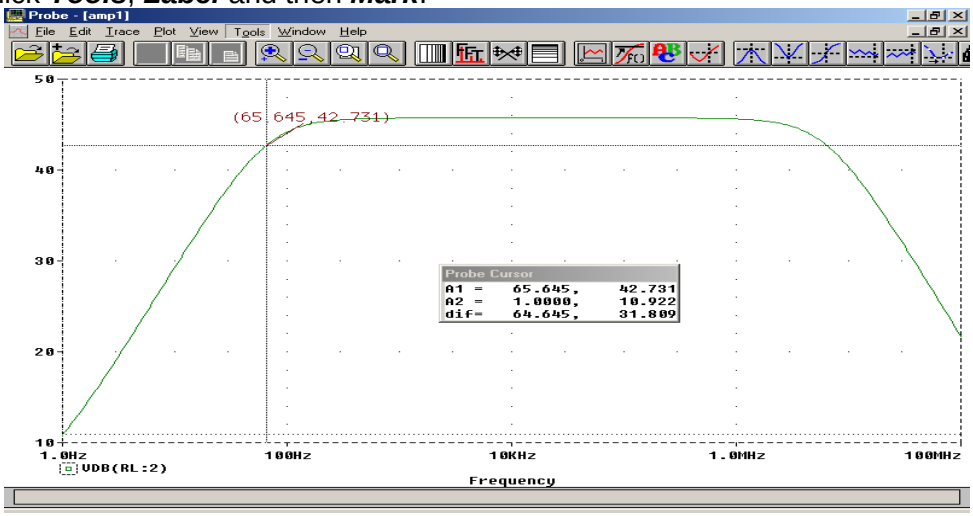

Figure 4.9: Cutoff frequency (-3dB)

32. Repeat step 29 to step 31 for right bode plot (fc2) such as figure 4.10.

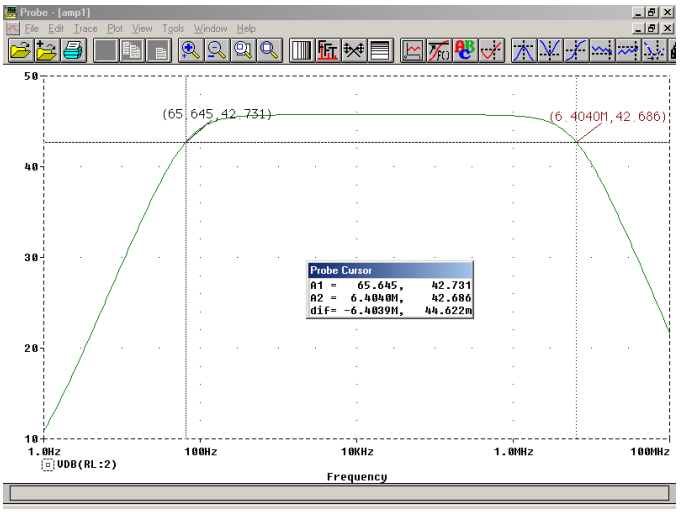

Figure 4.10: Bandwidth

33. Use the formula BW = fc2 – fc1 to find Bandwidth.

PART A: LOW-PASS FILTER. [CLO 3]

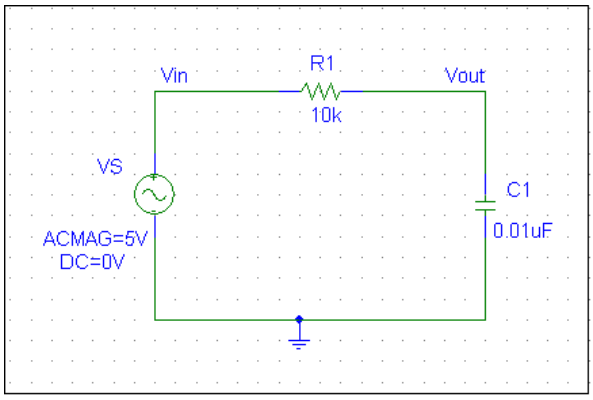

Figure 4.11: Low Pass Filter

Draw the low-pass filter (passive filter) in figure 4.11.

(Rubric : Circuit drawing –5 Marks)

ANALYSIS/RESULT:

1. Simulate the circuit from 1Hz to 100MHz with 100 points/decade.

2. Produce the Bode Plot for the dB(Vout/Vin). From the Bode plot, you are to determine the following:
   a. Maximum gain, A(max) in dB.
   b. The cut-off frequencies, fc1.

3. Draw and label the plot complete with A(max) and fc1on your answer sheet.

(Rubric : Analysis/Result – 10 Marks)

PART B: HIGH-PASS FILTER. [CLO 3]

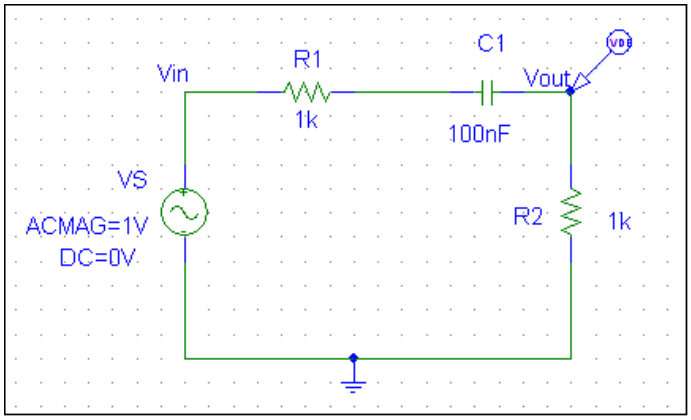

Figure 4.12: High pass-filter

Draw the **High-pass filter** (passive filter) in figure 4.12.

(Rubric : Circuit drawing –5 Marks)

ANALYSIS/RESULT:

1. Simulate the circuit from 1Hz to 100MHz with 100 points/decade.

2. Produce the Bode Plot automatically using marker. From the Bode plot, you are to determine the following:
   a. Maximum gain, A(max) in dB**.**
   b. The cut-off frequencies, fc1.

3. Draw and label the plot complete with A(max) and fc1on your answer sheet.

(Rubric : Analysis/Result – 10 Marks)

Conclusion :

Write the conclusion based on your findings

(Rubric : Conclusion - 5 Marks)

PREPARED BY	CHECKED BY	APPROVED BY
COURSE LECTURER	COURSE COORDINATOR	HEAD OF PROGRAM
NORISNIYATI ABDUL HAMID	NORHANANI ABD RAHMAN	MOHAMMAD FADZIL BASIR AHMAD
DATE : 20/1/2012	DATE : 20/1/2012	DATE : 20/1/2012